全漢企業股份有限公司
FSP TECHNOLOGY INC.
台灣桃園市桃園區建國東路22號　統一編號：84239055
No. 22, Jianguo E. Rd., Taoyuan Dist., Taoyuan City 330, Taiwan (R.O.C)
TEL:+886-3-375-9888　Website:www.FSP-group.com
FAX:+886-3-375-6966　Email:sales@fsp-group.com.tw

MECHANICAL DRAWING

文件資料管制
FSP GROUP
禁止翻印外傳

OAD14014006

ATX-400PNR(F88001)

Released Date:2015/06/22-17:53:08

全漢企業股份有限公司
FSP GROUP FSP TECHNOLGY INC.

REF. ID.	PIN NO.	SIGNAL	WIRE COLOR	GAUGE	CONNECTOR TYPE	LENGTH
P1 /24	1	+3.3VDC	ORANGE	20	JWT C4202H02-A20P /A4P OR EQIV.	330+30mm −10
	2	+3.3VDC	ORANGE	20		
	3	COM	BLACK	20		
	4	+5VDC	RED	20		
	5	COM	BLACK	20		
	6	+5VDC	RED	20		
	7	COM	BLACK	20		
	8	PW-OK	GRAY	24		
	9	+5Vsb	PURPLE	20		
	10	+12V1DC	YELLOW	20		
	11	+12V1DC	YELLOW	20		
	12	+3.3VDC	ORANGE	20		
	13	+3.3VDC	ORANGE	20		
	14	+3.3VDC	BROWN	24		
	14	−12VDC	BLUE	24		
	15	COM	BLACK	20		
	16	PS-ON	GREEN	24		
	17	COM	BLACK	20		
	18	COM	BLACK	20		
	19	COM	BLACK	20		
	20					
	21	+5VDC	RED	20		
	22	+5VDC	RED	20		
	23	+5VDC	RED	20		
	24	COM	BLACK	20		
PA	1				MOLEX 5D-67582-001 or EQIV.	155±10mm
	2	COM	BLACK	20		
	3	+5V	RED	20		
	4	COM	BLACK	20		
	5	+12V1	YELLOW	20		
PB	1				MOLEX 5D-67582-0011 or EQIV.	155±10mm
	2	COM	BLACK	20		
	3	+5V	RED	20		
	4	COM	BLACK	20		
	5	+12V1	YELLOW	20		
PC	1				MOLEX 5D-67582-0011 or EQIV. △2	450+30mm −10
	2	COM	BLACK	20		
	3	+5V	RED	20		
	4	COM	BLACK	20		
	5	+12V1	YELLOW	20		
PD	1	+12V1	YELLOW	22	AMP 171822-4 or EQIV.	155±10mm
	2	COM	BLACK	22		
	3	COM	BLACK	22		
	4	+5V	RED	22		
PE	1	COM	BLACK	18	MOLEX 39-01-2040 or EQIV.	310+30mm −10
	2	COM	BLACK	18		
	3	+12V2	YEL/BLK	18		
	4	+12V2	YEL/BLK	18		
PF	1	+12V1	YELLOW	20	AMP 1-480424-0 or EQIV.	250+30mm −10
	2	COM	BLACK	20		
	3	COM	BLACK	20		
	4	+5V	RED	20		
PG	1	+12V1	YELLOW	20	AMP 1-480424-0 or EQIV.	155±10mm
	2	COM	BLACK	20		
	3	COM	BLACK	20		
	4	+5V	RED	20		
PH	1	+12V1	YELLOW	22	AMP 171822-4 or EQIV.	155±10mm
	2	COM	BLACK	22		
	3	COM	BLACK	22		
	4	+5V	RED	22		
PI	1	+12V1	YELLOW	20	WST PH-142002BK5 or EQIV.	330+30mm −10
	2	+12V1	YELLOW	20		
	3	+12V1	YELLOW	20		
	4	COM	BLACK	20		
	5	COM	BLACK	20		
	6	COM	BLACK	20		

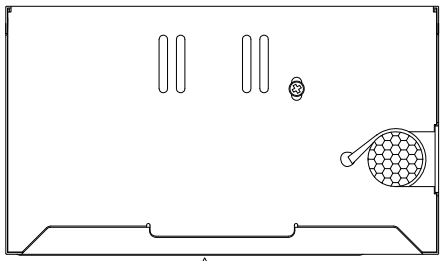

AIR FLOW

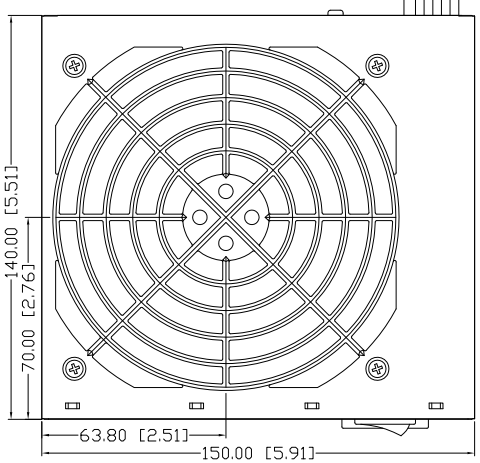

AIR FLOW

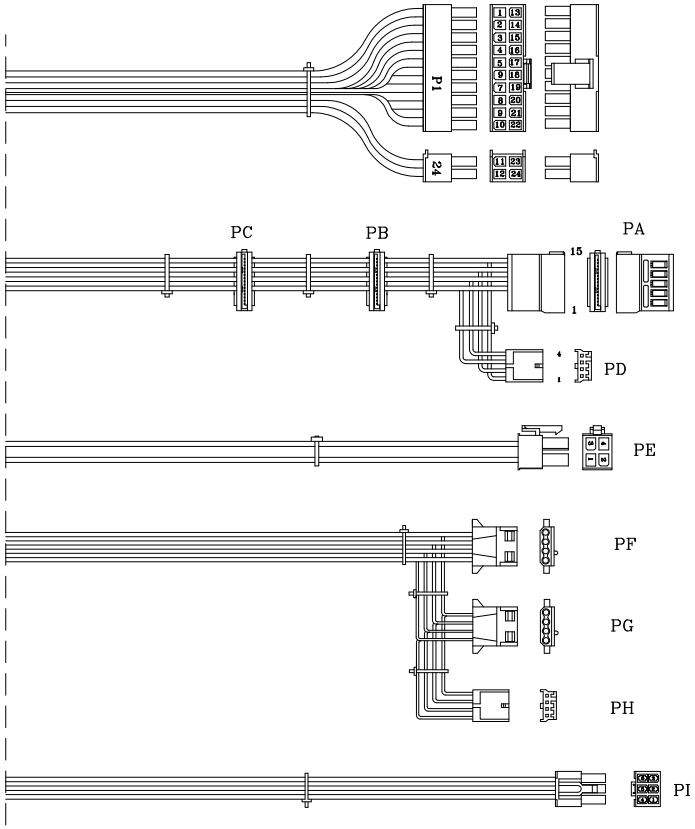

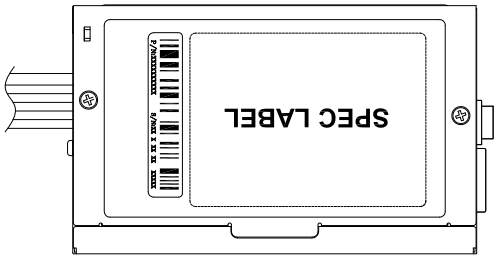

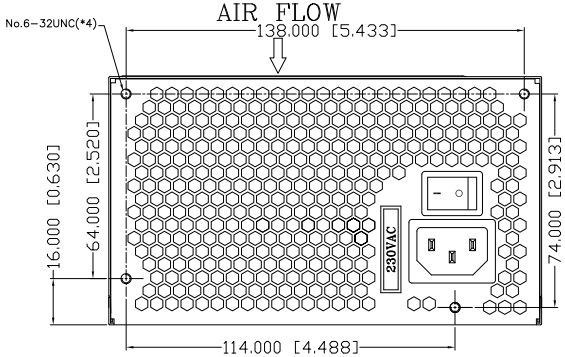

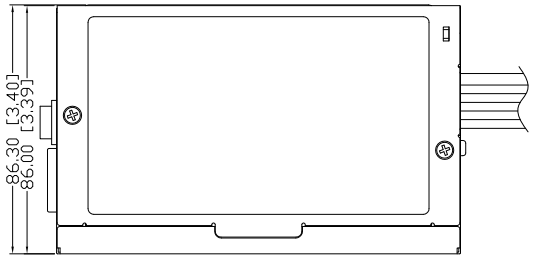

P/N.:9PA400BA01

MODEL NO. : ATX-400PNR(F88001)		TITLE: ASSY	SHEET: 1 OF 1	REV:02
R&D	PE	DRAWN	DATE	
			6/22/2015	
INTERIOR COUNTERSIGN:				

NOTE:
1. ALL THE LENGTH OF OUTPUT WIRES EXCLUDE HOUSING.
2. 產地標籤依業務指示加貼.
3. 公差: .XX=±0.5 [0.02]、.XXX=±0.25 [0.01].

UNIT:mm

Mechanical Drawing(外觀/機構圖)表單編號7000P-0111

文件資料管制 文件資料管制 文件資料管制 All rights reserved
發行時間:2015/6/22 5:53 下午 OAD14014006-R2.pdf
1/1禁止翻印外洩 All rights reserved