Electrical Specification

(with +12V&+12Vsb output (SGCC) CRPS Module For QD-Dist)

Drawn: 王宝玲

Design (EE): 彭清君

Design (ME): 黄奕常

Design (FE): 邵东恩

Approve: 李志锋

REV	Description	Date
S0	Release	2020/05/06

Contents

1.0 SCOPE

This specification defines the key characteristics for the 1200W power supply, which is intended for worldwide use in IT equipment such as server application. This unit contains +12V and +12Vsb output ports. All the specifications are applicable under all operating conditions when installed in the end used system unless other noted.

2.0 INPUT PARAMETER

2.1 Input Voltage/Input Current/Frequency

The power supply shall operate within input limited voltage range as defined as below table, which includes the limited value of input current, input voltage, working frequency. The power supply shall be capable of start up from min load to max load at line input as low as 90VAC.

Table1.

	Min	Rated	Max	Units
AC input voltage	90	100~240	264	VAC
Frequency	47	50-60	63	Hz
DC input voltage	160	160~340	400	VDC
Input current	<15A@100-127Vac @full load，<10A@200-240Vac/160-340Vdc @full load			

Note: Any long period of time for 265Vac~300Vac input at rate frequency range or 30Hz to 1KHz frequency at rated input voltage range shall not cause damage to or shut down the power supply.

2.2 Inrush Current

AC line inrush current shall not exceed 45A peak, after which, the input current should be no more than the specified maximum input current. Ignore the instantaneous charge current for X, Y caps, but the peak current during time should <0.2ms. The power supply must meet the inrush requirements for any rated input voltage, during cold start at any phase of AC voltage and under 25℃ ambient temperature.

2.3 AC Line Fuse

The power supply has a fuse in the live line wire of the input. The input fuse shall be a fast blow type. The input inrush current shall not cause the AC line fuse to blow under any conditions. All protection circuits in the power supply shall not cause the AC fuse to blow unless a component in the power supply has failed.

2.4 Efficiency

The power supply achieves the 80 plus platinum level by testing at the 230Vac/50-60Hz input, 25℃ ambient temperature and the loading condition show in below table.

Table2.

Load	+12V	+12Vsb	Efficiency requirement
10%	9.7A	0.3A	>86%
20%	19.4A	0.6A	>91%
50%	48.5A	1.5A	>94%
100%	97.0A	3.0A	>91%

Note: Add external +12Vcc for fan and the fan power is not included in efficiency calculation.

2.5 AC Line Dropout

An AC line dropout is defined to be when the AC input drops to 0VAC at any phase of the AC line for any length of time. During an AC dropout the power supply must meet dynamic voltage regulation requirements. An AC line dropout of any duration shall not cause tripping of control signals or protection circuits. If the AC dropout lasts longer than 10ms time, the power supply should recover and meet all turn on requirements. The power supply shall meet the AC dropout requirement over rated AC voltages and frequencies. A dropout of the AC line for any duration shall not cause damage to the power supply.

2.6 Power Factor

The power supply must meet the power factor requirements stated in the Energy Star Program Requirement for Computer Servers V2.0.

The power factor shall meet the requirement as below table at 230Vac/50-60Hz input condition.

Table3.

Load	10% Load	20% Load	50% Load	100% Load
PF	>0.88	>0.95	>0.97	> 0.98

2.7 Surge and Sag

AC line transient conditions are defined as “sag” and “surge”. “Sag” is defined as the AC line voltage drops below nominal voltage. “Surge” is defined as the AC line voltage rises above nominal voltage. The power supply should meet below AC line sag and surge conditions.

Table4. AC Line Sag Transient Performance

Duration	Sag	Input Voltage	Frequency	Performance Criteria
=1/2 AC cycle	95%	100~127VAC 200~240VAC	50/60Hz	Full load and no loss of function or performance
>1.0 AC cycle	>30%	100~127VAC 200~240VAC	50/60Hz	Loss of function acceptable, self-recoverable

Table5. AC Line Surge Transient Performance

Duration	Surge	Input Voltage	Frequency	Performance Criteria
Continuous	10%	100~127VAC 200~240VAC	50/60Hz	No loss of function or performance
0 to 1/2 AC cycle	30%	115VAC/230VAC	50/60Hz	No loss of function or performance

2.8 Input Power Loss

The input power should be lower than 5W when no load at PS off mode and lower than 12W PS ON at no load or cold redundant mode when 230Vac/50-60Hz input.

3.0 OUTPUT PARAMETER

3.1 Output Current

The following table defines the output current ratings. The combined output power of all outputs shall not exceed the rated output power (1000W/1200W). The power supply shall meet both static, dynamic voltage regulation and timing requirements for all loading conditions defined in specification.

Table6.

Input	Output Voltage	Min Current	Max current
90~140Vac	+12V	1.0A	80.5A
	+12Vsb	0.1A	3.0A
180~264Vac 160~400Vdc	+12V	1.0A	97.0A
	+12Vsb	0.1A	3.0A

Note:

1. The total max continuous output power is 1000W for 90~140Vac low input and 1200W for 180~264Vac /160~400Vdc high input.

2. The power supply can support no load working.

3.2 Voltage Regulation

The power supply output voltages must stay within the following voltage limits shown in below table when operating at steady state, dynamic loading conditions. All outputs are measured with reference to the return remote sense (ReturnS) signal.

Table7.

Output Voltage	Min	Rated	Max	Tolerance
+12V	11.4V	12.0V	12.6V	+/-5%
+12Vsb	11.4V	12.0V	12.6V	+/-5%

3.3 Ripple & Noise

Table8.

Output voltage	Ripple & noise
+12V	<120mV
+12Vsb	<120mV

Note:

1. The ripple & noise is measured over a bandwidth of 20MHz at the power supply output connectors. A 10μF & 2200uF low ESR electrolytic capacitor in parallel with a 0.1μF ceramic capacitor are placed at the point of measurement.

3.4 Timing

These timing requirements for power supply operation include alone module's output and multi modules' outputs. All outputs shall rise and fall monotonically. In additional, PSU timing must meet the requirement of mother board. The timing characteristics must be evaluated and verified when in design stage and system test stage.

Table9. Turn On/Off Timing

Item	Description	Min	Max	Units
Tsb_on_delay	Delay from AC being applied to +12Vsb being within regulation.		1500	ms
Tac_on_delay	Delay from AC being applied to +12V being within regulation.		3000	ms
Tvout _rise	Output voltage rise from 10% to 90% time for +12V.	5	70	ms
Tvout _rise	Output voltage rise from 10% to 95% time for +12Vsb.	1	25	ms

Tsb_vout	Delay from +12Vsb being in regulation to +12V being in regulation at AC turn on.	50	1000	ms
Tpson_on_delay	Delay from PSON active to output voltages being within regulation limits.	130	180	ms
Tpwok_on	Delay from output voltages within regulation limits to PWOK asserted at turn on.	100	500	ms
Tvout_holdup	Time 12V output voltage dropping to 11.4V after loss of AC.	13		ms
Tpwok_holdup	Delay from loss of AC to de-assertion of PWOK.	12		ms
T12Vsb_hold up	Time the +12Vsb output voltage stays within regulation after loss of AC.	70		ms
Tpwok_off	Delay from PWOK de-asserted to output voltages dropping out of regulation limits.	1		ms
Tpwok_low	Duration of PWOK being in the de-asserted state during an OFF/ON cycle using AC or the PSON signal.	100		ms
Tpson_pwok	PWOK being de-asserted delay from PSON deactivate.		5	ms

Note:

1. Tsb-on & Tac-on Delay Time: The Tsb-on delay time for +12Vsb should be ≤ 1.5s at rated input when full load. The Tac-on delay time for +12V should be ≤ 3s at rated input when full load.

2. Rise Time (Tvout _rise): The +12V must rise from 10% to 95% within regulation limits within 5 to 70ms. For +12Vsb, it is allowed to rise within 1.0 to 25ms. All outputs must rise monotonically.

3. Main Output Delay Time (Tsb_vout): The +12V main output being in regulation delay from +12Vsb being in regulation should be 50 to 1000ms when at AC turn on.

4. Tpson_on_delay: The +12V output must be within regulation after PSON active for 130 to 180ms.

5. Power Work OK Delay (Tpwok_on): PWOK should delay from +12V output within regulation for 100 to 500ms.

6. Hold Up Time(Tvout_holdup): The hold up time for +12V≧13ms & PWOK≧12ms at any phase of rated voltage input when ≤ full load. The hold up time for +12Vsb should≧70ms.

7. Power Fail Delay Time (Tpwok_off): +12V dropping out of regulation delay from PWOK should≥1ms when power off ≤ full load.

8. Duration Time for PWOK (Tpwok_low): The duration time of PWOK when OFF/ON cycle using AC or the PSON signal should ≥ 100ms.

9. PWOK Delay PSON Deactivate (Tpson_pwok): PWOK being de-asserted should delay from PSON deactivate≤ 5ms.

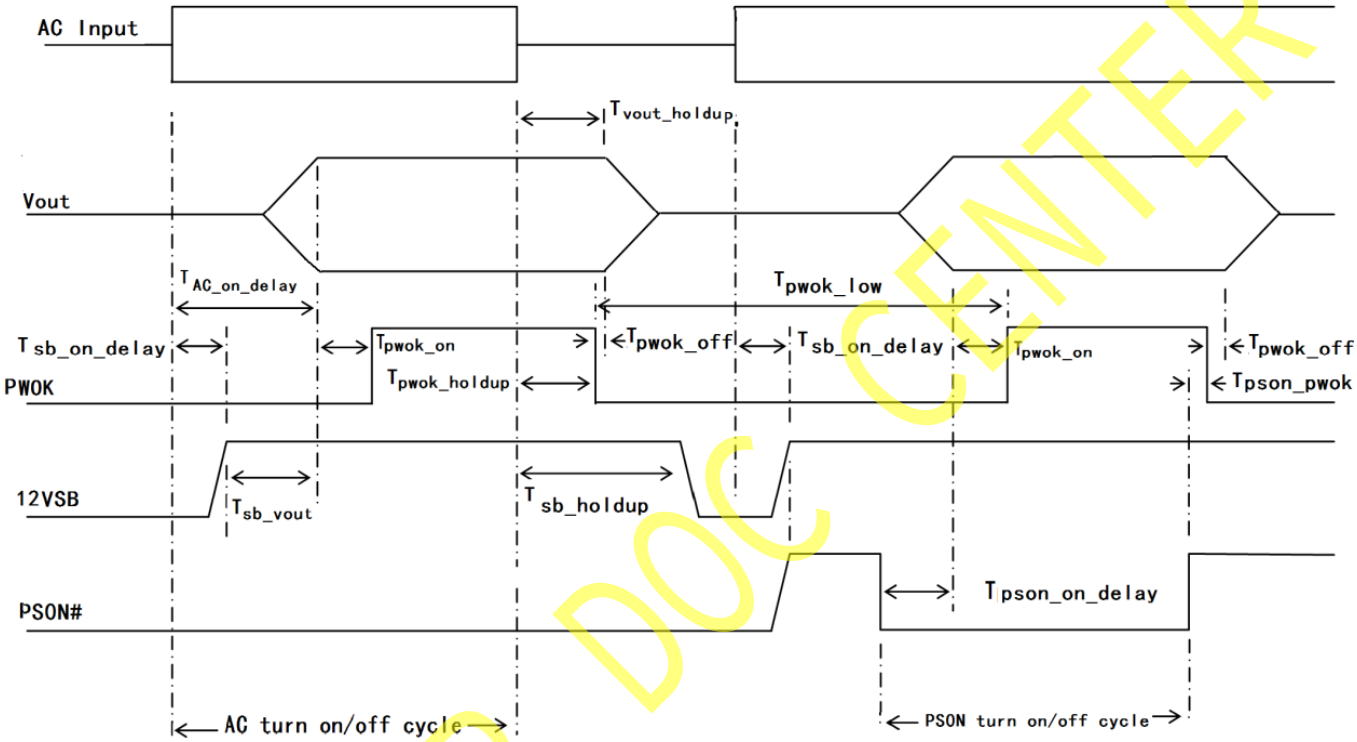

3.5 Overshoot

The turn-on overshoot due to application of AC input or remote enable shall be < 5% of the nominal output voltage for any application of input voltage within the specified range.

Overshoot/undershoot on turn on or restart must meet under all loading conditions, including minimum output capacitance on all output voltages.

3.6 Dynamic

The output voltage shall remain within limits specified for the step loading, slew rate, and capacitive loading in below table.

The load transient repetition rate shall be tested between 50Hz to 5KHz at 50% duty cycles. And +12V's, +12Vsb's min load is 1.0A, 0.1A when do dynamic loading test. The test shall be at least in 50 Hz/1KHz/5KHz condition. The output current transient repetition rate is only a test specification.

Table10.

Output Voltage	Transient Step (A) Percent of Rated Current	Slew rate (A/us)	Frequency (Hz)	Cap (uF)
+12V	60% of max load	0.5	50-5K	1000uF
+12Vsb	1.0	0.5	50-5K	1000uF

3.7 Capacitive Loading

The power supply shall be stable and meet all requirements with the following capacitive loading range, including start up with full load. The PSU is not damaged include normal turn on timing, running under all load conditions.

Table11.

Output Voltage	+12V	+12Vsb
Capacitive loading (uF)	2000~50000	10~3100

3.8 Current Sharing

All outputs shall be capable of operating in a redundant current share mode. A maximum (eight) of power supplies may be operated in parallel. All outputs shall incorporate an isolation diode or mosfet for fault isolation. The +12Vsb current sharing shall be a drop type. The +12V current sharing shall be an active type. Connecting the load share bus pins of each power supply together shall enable the current share feature. With the current share pins tied together, the +12V output load current shall be balanced to within 5% when 12V output at ≧15% total full load and no load for +12Vsb.

Shorting or opening of a current share pin shall not cause the output voltage to go out of steady state regulation. For 97.0A load the +12Vbus voltage shall be 8 V for a single power supply. The +12Vbus pin's voltage VS load requirements are as below table and curve when single power supply.

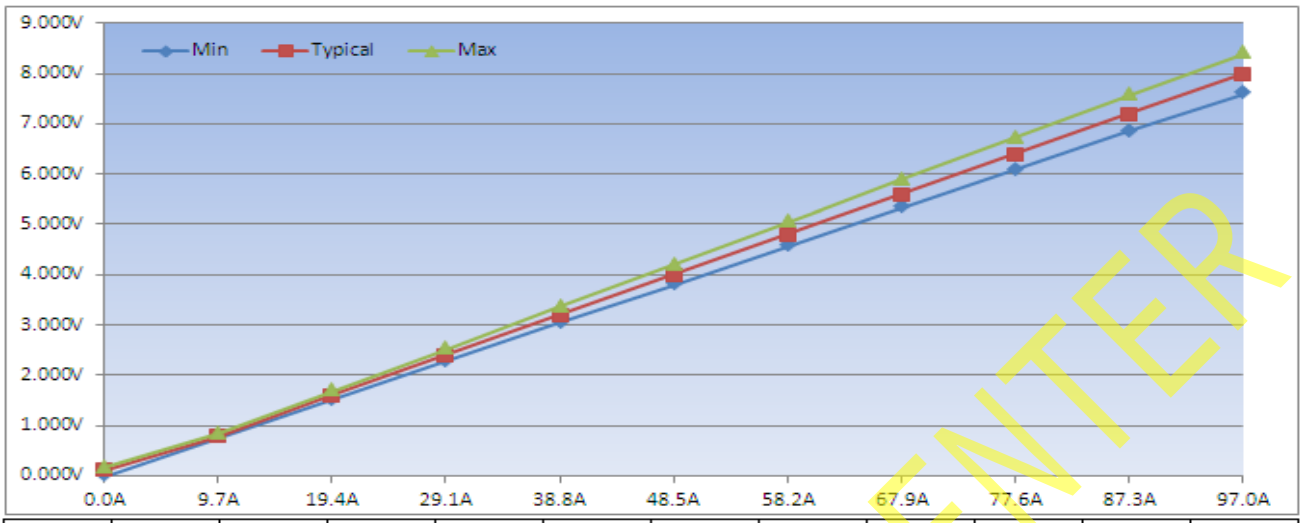

Load	0.0A	9.7A	19.4A	29.1A	38.8A	48.5A	58.2A	67.9A	77.6A	87.3A	97.0A
Min	0.000V	0.760V	1.520V	2.280V	3.040V	3.800V	4.560V	5.320V	6.080V	6.840V	7.600V
Typical	0.125V	0.800V	1.600V	2.400V	3.200V	4.000V	4.800V	5.600V	6.400V	7.200V	8.000V
Max	0.175V	0.840V	1.680V	2.520V	3.360V	4.200V	5.040V	5.880V	6.720V	7.560V	8.400V

Note: The voltage on +12Vbus should meet the V-I curve requirement when ≧50% full load.

3.9 Hot Swap Requirement

Hot swapping is the process of inserting and extracting a power supply from an operating power system. During this process the output voltage shall remain within the limits. The hot swap test must be conducted when the system is operating under static, dynamic and no loading conditions. The power supply shall use a latching mechanism to prevent insertion and extraction of the power supply when the AC power cord is inserted into the power supply. The power supplies must be able to operate in a hot-swap/redundant configuration.

3.10 No Load Condition

The power supply shall not be damaged nor cause abnormal operation at any load conditions including no load. The power supply shall be able to turn on and off under no load condition. The on and off waveforms shall be monotonic.

3.11 Output Regulation

All outputs shall remain within the tolerances in section 3.2's table under all allowable load and temperature conditions during load variations on the other output voltage, any combination of the following conditions. The outputs will be measured at the output terminals.

1. Input operating rated range.
2. Specified load range.

3. Cross regulation on dual or multiple outputs.
4. Specified environmental conditions.

3.12 Grounding

The output ground of the pins of the power supply provides the output power return path. The output connector ground pins shall be connected to the safety ground (power supply enclosure). This grounding should be well designed to ensure passing the max allowed common mode noise levels. The power supply shall be provided with a reliable protective earth ground. All secondary return circuits shall be connected to protective earth ground.

3.13 Control Signal

3.13.1 Control and Status Signals

All control signals shall be TTL compatible with respect to the output return and shall be isolated from the primary circuit and be SELV (safety extra-low voltage circuit) rated.

3.13.2 Input OK Signal

Input OK signal is an input voltage OK signal and will be asserted low to indicate the power supply's input voltage are within range. If the input voltage is out of range, the input OK signal will be pulled to a high state. This signal accepts an open collector/drain input from the system and a 5.1K ohm resistor pull up to +3.3Vs located in power supply.

Table12. Input OK Signal Characteristic

Signal Type	Power State	Logic Level (Min)	Logic Level (Max)
Input OK Signal=Low	Input OK	0V	0.4V
Input OK Signal=High	Input Fail out of Range	2.4V	3.46V

3.13.3 PSON Input Signal

The PSON signal is required to remotely turn on/off the power supply. PSON is an active low signal that turn on the +12V power rail. When this signal is not pulled low by the system, or left open, the outputs (except the +12Vsb) turn off. This signal is pulled to a standby voltage by a pull-up resistor internal to the power supply. Refer to section 3.4 for the timing diagram. This signal accepts an open collector/drain input from the system and a 5.1K ohm resistor pull up to +3.3Vs located in power supply.

Table13. PSON Signal Characteristic

Signal Type	Power State	Logic Level (Min)	Logic Level (Max)
PSON=Low	ON	0V	1.0V
PSON=High or Open	OFF	2.0V	3.46V
Source Current (Low)	ON		4mA

3.13.4 PWOK (Power OK) Output Signal

PWOK is a power OK signal and will be pulled high when the power supply to indicate that all the outputs are within the regulation limits of the power supply. When any output voltage falls out of regulation limits or when AC power has been removed for a time sufficiently long so that power supply operation is no longer guaranteed, PWOK will be de-asserted to a low state. The start of the PWOK delay time shall inhibited as long as any power supply output is in current limit. This signal is open collector/drain output and a 0.27K ohm resistor pull-up to +3.3Vs in power supply.

Table14. PWOK Signal Characteristic

Signal Type	Power State	Logic Level (Min)	Logic Level (Max)
PWOK=Low	Power Not OK	0V	0.4V
PWOK=High	Power OK	2.4V	3.46V
Sink Current (Low)			0.4mA
Source Current (High)			2mA
PWOK Rise and Fall Time			0.1ms

3.13.5 Alert Signal

This is low active, sideband and open collector signal indicates that the power supply is experiencing a problem, warning or fault that the user should investigate. The signal shall activate in the case of critical component temperature reached a warning threshold, general failure, over current, over voltage, under voltage, failed fan. It’s also to be asserted in parallel with LED turning solid Amber or blink Amber. This signal is open collector output and a 2K ohm resistor pull-up to +3.3Vs in power supply.

Table15. Alert Signal Characteristic

Signal Type	Power State	Logic Level (Min)	Logic Level (Max)
Alert=Low	Alert to system	0V	0.4V
Alert=High	Power OK	2.4V	3.46V
Sink Current, Alert=Low			4mA
Alert Rise and Fall Time			0.1ms

3.13.6 SDA and SCL Signal

SDA and SCL pins (for I2C bus) is designed to operate at +3.3V volts. The pull-up resistors are 10K ohm to +3.3Vs in power supply.

3.13.7 A0, A1 Signal

PSU module address line 0 and line 1. This signal line is provided for determining the address for the specific PSU FRU and SMBus address. A 10K ohm resistor pull-up to +3.3Vs located in the PSU for each. The address line should be either float or pull low with equal to or less than 100ohm in the motherboard design.

3.13.8 Power Cold Redundancy Requirement

3.13.8.1 Power MCU Address Settings

Power should support N+1 cold redundant (N≤3). Power address settings is refers to the below table.

Table16. Power MCU address settings

A1(B20 PIN)	A0(B19 PIN)	Power Internal MCU Address	Power slot position
0	0	B0	1
0	1	B2	2
1	0	B4	3
1	1	B6	4

3.13.8.2 Cold Redundancy Configuration

There is a Cold_Redundancy_CONFIG (D0h) command in power supply, the system can read or write access. The format of the command for example: the command S B0 w D0 01 PEC P is to set the register of power supply B0 to 01h. According to the requirements, the value of the register can be set to 00h / 01h / 02h /03h / 04h according to the requirements. The different value represents the diffident meaning that can refer to the descriptions from the below table.

Table17. Cold Redundant Configuration Description

Cold Redundant Configuration (D0h)		
Value	State	Description
00h	Standard Redundancy	Power loading in average cold redundant.
01h	Cold Redundant Active	Normal operating output power from cold redundant.
02h	Cold Standby 1	Standby power1 without output power from cold redundant.
03h	Cold Standby 2	Standby power2 without output power from cold redundant.
04h	Cold Standby 3	Standby power3 without output power from cold redundant.
Remarks: The power supply which is in cold standby mode will not involve the output loading by slightly decreases its output voltage.		

The default factory setting state is standard redundancy; its value is 00h.

When power supply occurs any abnormal conditions (including AC cord plugging in/out, power off reset, over-temperature warning, ambient temperature out of range; 12V short protection, UVP, OVP, OCP, Fan alert and abnormal internal circuit) will make the register value reset to default 00h, and also set the Cold Redundant BUS short for CRB (B22 PIN) to low level, force the other paralleled operating power supplies into standard redundancy state.

3.13.8.3 Cold Standby Signal Require

The essential condition for power supply access into cold standby state: PSON is low level, the register value should be 02h/03h/04h. At the same time the requirements for the power supply which is access into cold standby state as below:

When CRB is low level, the power of cold redundant active and cold standby should be awaked immediately and the D0h value recover to 00h, moving into standard redundancy state.

Keep PWOK (A25 PIN) as high level.

Every power status should keep normal, could not report any fault or abnormal condition, unless it is indeed existed.

Indicator light should flicker as the specification requirements.

3.13.8.4 Access Cold Redundancy Status

For example (at most 4 units power), the cold redundancy operating mode of power supply should follow the below descriptions.

Cold Redundancy BUS (B22 PIN) abbreviate CRB, power Supply Unite abbreviate PSU.

Table18. Power Access Cold Redundancy example sheet

PSU	D0h Register Value(hex)				
	Step1	Step2	Step3	Step4	Step5
1#	00	01	01	01	01
2#	00	00	02	02	02
3#	00	00	00	03	03
4#	00	00	00	00	04
CRB	Low Level	Low Level	High Level	High Level	High Level

Remarks:

1. The PSU 1#~4# don't have correspondence with I2C Address B0~B6 ,that the PSU#1 does not necessarily refers to PSU from physical slot 1 (B0) of system.

2. Step1~Step5 indicate the configuration procedure to PSU's internal register by the system.

3. Step3~Step5There are PSUs in the system move into cold redundancy mode

4. Before move in cold redundancy, all operating power D0h value must set as 01, then may set any power optionally D0h register value as 02h/03h/04h, to make the power move in cold redundancy, but it must ensure at least 1unit power will be 01h.

5. Take the example of 1+1 redundant of 2PSUs, when working in the cold redundant mode, one of the PSUs should be 01h, and another one can be any of 02h/03h/04h, the difference between 02h/03h/04/ refer to chapter.

3.13.8.5 Exit Cold Redundancy State

Power supply support exiting the cold redundant mode both by command via system and the real time load reach the exit threshold.

1. Exit Cold Redundancy command via system

When PSU is working in cold redundancy mode, system can send command to order the PSU in cold standby mode. By setting the D0h to 00h or 01h to exit cold standby and move into cold redundant active or standard redundancy mode.

When setting the cold standby PSU to 01h, to let it move into cold redundant active state, but it could not affect the state of other paroled PSU which is in cold standby state.

When setting the cold standby PSU to 00h, to let it move into standard redundancy state, at the same time change the high level for CRB to low level. And drive all paralleled power to move in standard redundancy state.

2. Exit Cold Redundancy Automatically by Output Loading Reach the Setting Threshold

When output loading is bigger than 40% of full load, the PSU's value of D0h is 02h will exit Cold Standby1, and move into cold redundant active mode, but the value of D0h will remains unchanged, is still 02h. The CRB should keep high level.

When output loading is bigger than 62% of full load, the PSU's value of D0h is 03h will exit Cold Standby2, and move into cold redundant active mode, but the value of D0h will remains unchanged, is still 03h. The CRB should keep high level.

When output loading is bigger than 84% of full load, the PSU's value of D0h is 04h will exit Cold Standby3, and move into cold redundant active mode, but the value of D0h will remains unchanged, is still 04h. The CRB should keep high level.

The PSU is in Cold Standby mode should polling its output power and check if its output power is bigger than the value of D0h's setting point, if its output power is bigger than the setting point (should have multiple polling confirmation), it must exit cold redundant mode and move into Cold Redundant Active mode within 500ms. When the output load is smaller than 18% of full load, PSU can automatically enter the cold redundant mode.

PSU pull low the CRB when PSU has abnormal condition at any time, all PSU will move into Standard Redundancy mode .The range of low level CRB is 0V-0.6V, the range of high level of CRB is 2.0V-3.46V.And the timing sequence of pulling low the CRB should be the high so that to ensure awaking other cold redundant PSU in time.

Take the example of 1+1 cold redundant of 2 units PSU ,when PSUs are operating in Cold Redundancy mode ,one of the PSUs is 01h,another one is 02h,when output power is bigger than 40% of full load, it must exit cold redundant mode and move into Cold Redundant Active mode ,02h remains unchanged. When output power is smaller than 18% of full load, it must automatically enter the cold redundant mode.

Loading ratio is refer to I-Share bus compare with full loading 8V, is not refer to the presented PSU's rated total power.

3.13.9 EEPROM

The power supply shall have an ID EEPROM which contains power supply specific information:

Specially assemble part number, serial number, assembly deviation, special configurations, test history, field test history, and field trace-ability data. This data is stored in an EEPROM device located inside of the power supply. A 256bytes serial EEPROM is used in power supply. This device will be programmed by the unit vendor with detailed information on the unit. This device shall have its highest

order address bit (A2 internally wired to ground). The A0 & A1 address bit are wired to the output connector and includes an internal 10K ohm resistor pull up to the +3.3Vs.

Table19. Address Signals

A1	A0	EEPROM Address	MCU Address	PSU
0	0	A0	B0	1
0	1	A2	B2	2
1	0	A4	B4	3
1	1	A6	B6	4

3.13.10 LED Indicators

There will be a dual color LED lamp on the case's front panel, the color is green and orange to indicate the power supply status. There will be a (slow) blinking green to indicate that AC is applied to the PSU and the standby voltage is available. It shall go steady to indicate that all the power outputs are available. This same LED will (slowly) blink or be solid ON orange to indicate that the power supply reached a warning status or has failed and therefore a replacement of the unit is/maybe necessary. The LED operation is defined as below table.

The LED shall be visible on the power supply's exterior face. The LED locations shall meet ESD requirements. The LED shall be securely mounted in such a way that incidental pressure on the LED won't cause it to become displaced.

Table20. LED State Requirement

Power Supply Status	LED Status
+12V Output ON and OK.	Green ON
No AC power to all power supplies.	OFF
AC present/Only 12Vsb on (PS off).	1Hz Blink Green
AC cord unplugged or DC power lost; with a second power supply in parallels still with AC input power.	Orange ON
Power supply warning events where the power supply continues to operate: high temperature warning, Fan Fail warning, Over current warning.	1Hz Blink Orange
Power supply critical event causing a shutdown: UVP, OVP, OCP, OTP.	Orange ON
When the power in cold redundant state.	0.33Hz Blink Green 1s off and 2s Green

3.13.11 Signal Ripple & Noise Requirement

Some significant signals should have a ripple and noise requirement as below table. The test condition should under no external capacitor but mating with customer's system.

Table21.

Signal	SCL High	SDA High	PSON Low or High	Alert Low or High	PWOK Low or High	Input_OK Low or High	Present Low
Test @ 20MHz	300mV						

4.0 PROTECTION

When the input UVP/OVP, +12Vsb output's UVP/OCP/OVP, unit's OTP or high ambient temperature protection is triggered, the power supply will shut down and self-recovery when the fault condition removed. If +12V output's UVP/OCP/OVP is triggered, the power supply will shut down and latched off the +12V output. The latch state can be cleared by toggling the PSON signal or by an AC power interruption of 5 seconds nominal. If the auxiliary converter's OTP is triggered, the power supply will shut down and auto-restart immediately.

4.1 Input Under and Over Voltage Protection (Input UVP/OVP)

The input UVP and OVP should meet below table.

Table22.

Input voltage	Under voltage protection	Self-recovery voltage
HVDC	145V±5V	155V±5V
AC	74V±5V	84V±5V
Input voltage	Over voltage protection	Self-recovery voltage
HVDC	418V±8V	408V±8V
AC	316V±6V	310V±6V

4.2 Output Under and Over Voltage Protection (Output UVP/OVP)

The power supply should have over and under voltage protection to prevent the outputs from exceeding limits or abnormal operation. If the +12Vsb's UVP/OVP occurred, the power supply should shut down and self-recovery after the fault condition removed. If the +12V's UVP/OVP occurred, the power supply will shut down and latched off. The latch state can be cleared by toggling the PSON signal or by an AC power interruption of 5 seconds nominal.

+12Vsb & +12V UVP range: 9.0~10.5Vdc; +12Vsb & +12V OVP range: 13.3~14.5Vdc.

The over and under voltage protection should tested at +12V/1.0A, +12Vsb/0.1A load condition.

4.3 Over Temperature Protection (OTP)

The power supply will be protected against over temperature conditions caused by loss of fan cooling or excessive ambient temperature. In over temperature protection (OTP) condition the PSU will shut down. When the power supply temperature drops to within specified limits, the power supply shall restore power automatically, while the +12Vsb remains always on.

There are four temp sensors in the power supply, The first is on the main board to sense the PFC MOSFET copper temperature, it will trigger primary OTP and self-recovery when the PFC MOSFET temperature return to a safe point. The second is on the main board to sense the auxiliary converter MOSFET's temperature, it will trigger auxiliary converter +12Vsb output's OTP and auto-restart immediately for single module. The third is on the transformer PCB board to sense the synchronous MOSFET's copper temperature. It will trigger secondary OTP when the sensor resistor's temperature reached limit and self-recovery. The last one is a temperature sense resistor on the main board and located at the air intake to sense the ambient temperature. The power supply will shut down if the ambient temperature reached the limit and self-recovery when the ambient temperature returns to normally. Before the fourth OTP triggered, there is warming first, and the trigger points are as below table.

Table23.

The temp sensors	Over temperature warning	Over temperature protection	Self-recovery temperature
Fourth ambient	62±5℃	64±5℃	60±5℃

4.4 Short Circuit Protection (SCP)

The power supply shall be protected from damage due to faults between output (+12V or +12Vsb) and GND. Short circuit of the power supply outputs shall not result in fire hazard, shock hazard, or damage to the power supply. Components shall not be damaged during the short circuit conditions. If the +12V shorted to GND, the power supply will shut down and latched off. All outputs shut down upon a short circuit of the +12Vsb and when the short is removed, the power supply shall self-recovery.

4.5 Over Current Protection (OCP)

The power supply should have over current protection to prevent the outputs from exceeding limits. If the +12V's OCP occurred, the power supply should shut down and latched off. If the +12Vsb's OCP

occurred, the power supply should shut down and self -recovery after the over current condition removed. It also has 150% peak load function when start up for 10s.

+12Vsb OCP range: 3.5~7.0A; +12V OCP range: 90~100A for 90~140Vac low input and 110~125A for 180~264Vac or 160~400Vdc high input. The +12V main output can endure a peak load of 150% full load for 50ms min, after the occurrence of peak current 5~8ms, the Alert signal will be low.

Table24. OCP Limited Specification

+12V Main Output	Low Input	High Input	LED
Over current warning	90±5A	110±5A	1Hz Blink Orange
Over current protection	90~100A	110~125A	Orange
Over current recovery	83~90A	100~110A	Green
Peak load (50ms)	110~125A	131~150A	Orange
+12Vsb	Total Range Input		LED
Over current warning (PS OFF)	3.8±0.3A		1Hz Blink Green
Over current warning(PS ON)	3.8±0.3A		1Hz Blink Orange
Over current protection (PS ON)	6.2±0.3A		Blink Orange
Over current protection (PS OFF)	4.2±0.3A		Blink Orange

4.6 Fan Warning and Fault

If the fan speed control duty cycle was set greater than 10%, but the fan speed is between 500 and 1000 RPM, the PSU should send out fan alarm signal, when it less than 500RPM, the PSU should send out fan failure signal.

5.0 OPERATE ENVIRONMENT

Table25. Environment Limits

Item	Unit	Min	Nominal	Max	Notes
Operating Temperature	℃	0	35	50	The power supply should start up at -25℃, But no electrical property requirement.
Storage Temperature	℃	-40	25	70	Non-operating, maximum rate of change of 20℃/hour.
Relative Humidity	%	10		90	Operating, non-condensing.
		5		95	Non-operating, non-condensing.
Operating Altitude	m	0		5000	The power supply max operating ambient temperature is defined at sea level. The max operating ambient temperature should drops at a slew of 0.33℃/100m altitude raised.
Storage Altitude	m	0		15000	
Mechanical Shock	50G trapezoidal wave, velocity change =170in./sec				Non-operating. Three drops in each of six directions are applied to each of the samples.

6.0 SAFETY

6.1 Safety Certification

1、FCC　2、CE　3、CCC

6.2 Hi-pot

Primary to secondary, HI-POT Withstand voltage: 10mA max 1500Vac, 50/60Hz or 0.5mA max 2121Vdc for 60 seconds for power supply unit; 10mA max 3000Vac, 50/60Hz or 0.5mA max 4242Vdc for 60 seconds for PCBA.

Primary to GND, HI-POT Withstand voltage: 10mA max 1500Vac, 50/60Hz or 0.5mA max 2121Vdc for 60 seconds.

6.3 Grounding Impedance Test

Grounding impedance test using grounding current 32A for 60s and the impedance is less than 100mohm.

6.4 Leakage Current

In order to ensure that the leakage current of the power supply case not cause leakage damage to the human body, after inserting the AC power, the leakage current of the power supply should meet the requirements of safety. Under 240Vac/60Hz conditions to be less than 1.75mA test with customer system.

6.5 Insulation Resistance

Primary to Secondary: 500Vdc for 60S, the isolation resistance shall not be less than 100Mohm.

7.0 OUTLINE STRUCTURE

7.1 Outline Dimension

Outline dimension: 185mm (L)*73.5mm (W)* 39mm (T)

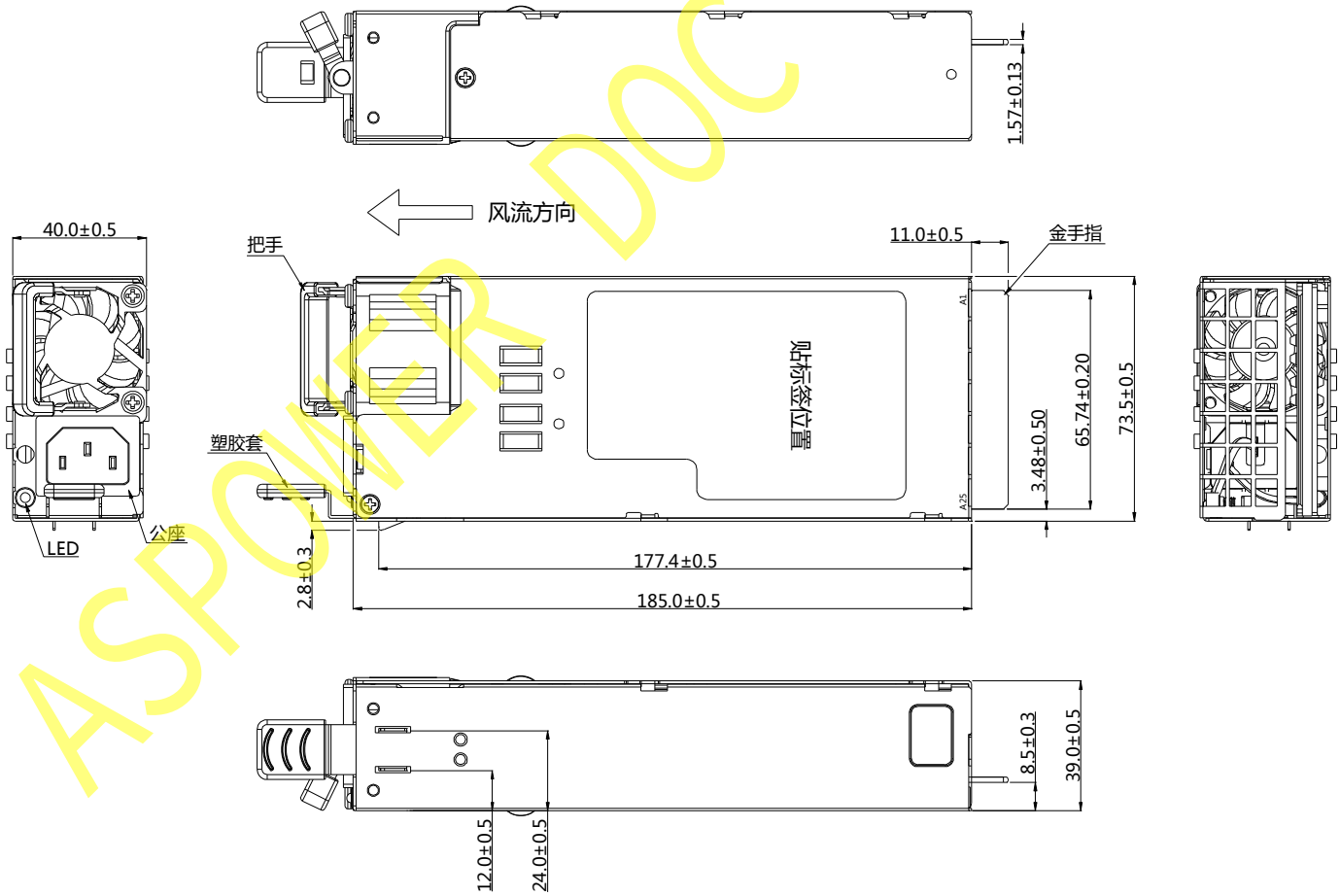

7.2 Output Connector

Pin	Name	Pin	Name
A1	GND	B1	GND
A2	GND	B2	GND
A3	GND	B3	GND
A4	GND	B4	GND
A5	GND	B5	GND
A6	GND	B6	GND
A7	GND	B7	GND
A8	GND	B8	GND
A9	GND	B9	GND
A10	+12V	B10	+12V
A11	+12V	B11	+12V
A12	+12V	B12	+12V
A13	+12V	B13	+12V
A14	+12V	B14	+12V
A15	+12V	B15	+12V
A16	+12V	B16	+12V
A17	+12V	B17	+12V
A18	+12V	B18	+12V
A19	SDA	B19	A0
A20	SCL	B20	A1
A21	PSON	B21	+12V SB
A22	Alert	B22	SM-Bus
A23	GND Sense	B23	+12Vbus
A24	+12V Sense	B24	Present
A25	PWOK	B25	Input OK

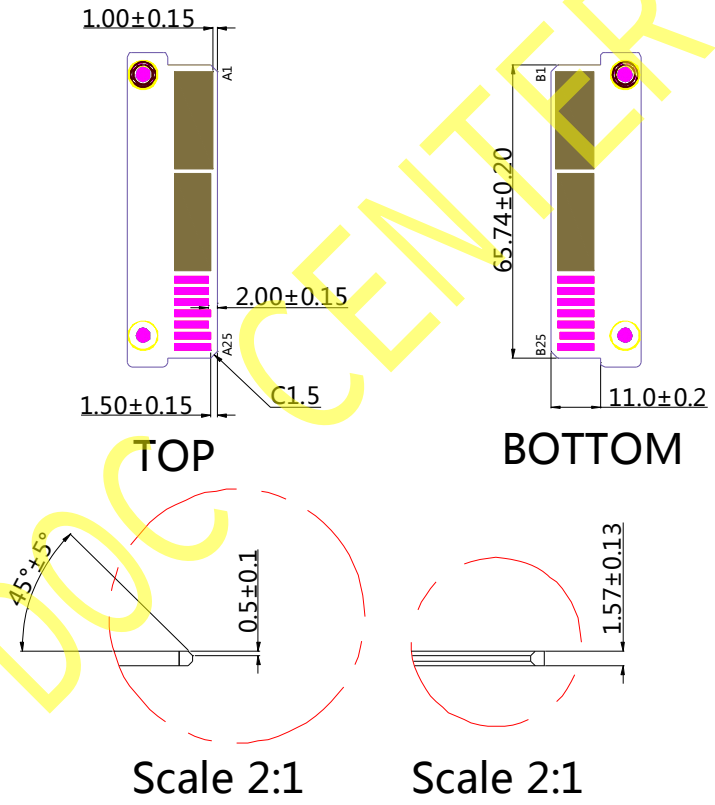

Table26. Output Terminals

Signal	Description
GND	Outputs return and it's also connected with the case.
+12V	The main output voltage.
PMBus*SDA	I2C Data bus.
PMBus*SCL	I2C Clock bus, 100kHz max.
A0(SMBus*address)	Address set Pin.
A1(SMBus*address)	Address set Pin.
PSON	Remote ON/OFF control signal: When the PSON signal is low, the power supply will turn on the +12V main output, and turn off when it's high.
+12Vsb	The auxiliary output voltage.

Alert	Power supply warning signal: When this pin get low signal will notice system the power supply has some fault occurred.
SM-Bus	Power supply cold redundancy control signal.
GND Sense	+12V output GND return sense for feedback.
+12V Sense	+12V output voltage sense for feedback.
+12Vbus	+12V output load sharing bus.
PWOK	Power supply work OK signal.
Present	The power online signal, connected to GND in the power supply.
Input OK	Input voltage OK signal, low level means input voltage is in range.

8.0 ROHS

Power supply must meet be Rohs6 compliant including the component, PCB, soldering material, case, wire, and so on.

9.0 EMI AND EMS REQUIREMENT

Table27. EMI (Electromagnetic Interference) Requirements Table

Item	Description and Requirement	Criterion	Notes
Radiated Emissions	Frequency: 30MHz~1GHz Class A with 3dB Margin	EN 55022	230V/50Hz input
		FCC Part 15	120V/60Hz input
		VCCI V-3	100V/50Hz input
Conducted Emissions	Frequency: 150KHz~30MHz Class A with 3dB Margin	EN 55022	230V/50Hz input
		FCC Part 15	120V/60Hz input
		VCCI V-3	100V/50Hz input
Harmonic	EN 61000-3-2 Class A	EN 61000-3-2	230V/50Hz input
Voltage Flicker	Pst≦1.0 and Plt≦0.65 Voltage change≦3.3% Relative Voltage change≦4% The voltage changed over 3.3% duration time should≦500ms	EN 61000-3-3	230V/50Hz input

Table28. EMS (Electromagnetic Susceptibility) Requirements Table

Item	Description and Requirement	Level	Criterion
Surge	Different Mode: ±1KV Common Mode: ±2KV	B	EN61000-4-5 EN 55024
Electrical Fast Transient Group (EFT)	±2KV	B	EN61000-4-4 EN 55024 YD/T 1082
Electrical Static Discharge (ESD)	Touch: ±6KV Air: ±8KV	B	EN61000-4-2 EN 55024
Radiated Susceptibility (RS)	80M~800MHz 3V/m 800M~960MHz 10V/m 960M~1GHz 3V/m 1.4G~2GHz 10V/m 2G~2.7GHz 3V/m 80% AM	A	EN 61000-4-3
Conducted Susceptibility (CS)	150KHz~80MHz 3V 80% AM	A	EN 61000-4-6 EN 55024
Voltage Dips and Interruptions	0% Ut: 10ms 70% Ut: 500ms 0% Ut: 5000ms	B C C	EN 61000-4-11 EN 61000-4-29 EN 55024 / 60601 GB 19286

Performance criterion of the voltage fluctuation immunity test:

A: The power supply should have no loss of function or degradation of performance according to its specification during the test.

B: Temporary loss of function or degradation of performance is acceptable, but all the outputs should be in an acceptable range and should recover to normal after the test. The power supply shouldn't loss any of outputs, reset or any abnormal warning when doing the test with system.

C: Temporary loss of function or shut down is acceptable, but the power supply should restart with an operator intervention or auto-restart normally after the test.

10.0 MECHANICAL PERFORMANCE

Non-operating:

Sine sweep: 5~500Hz @0.5gRMS at 0.5 octave/min; dwell 15 min at each of 3 resonant points;

Random profile: 5Hz @0.01g^2/Hz (slope up); 20~500Hz @0.02g^2/Hz (flat);

Input acceleration = 3.13gRMS; 10min.per axis for 3 axis on all samples.

11.0 MTBF

The power supply shall have a reliability requirement as below table when under full load and 100Vac/60Hz or 230Vac/50Hz input.

Table29.

Item	Requirement	Notes
Life Time	≧5 years at 30℃ ambient	Should ≧7 years at 25℃ ambient when mating with customer system.
CMTBF (Calculated MTBF)	≧250,000 hours, at 30℃ ambient temperature and full load.	Telcordia Technologies SR-332 (Method I Case 3).
Electrolytic capacitor calculated life	≧5 years	30℃ ambient and full load using capacitors supplier equation.
Fan L10 Life	≧5 years	30 ℃ ambient and full load.
Fan Noise	60dBA (220Vac input)	30 ℃ ambient and full load.
Annual Return Rate	≦0.1%	
Warranty	≧3 years	

12.0 PACKAGE

Power supply module package shall be the PE bag to avoid power supply damage in shipment.

12.1 Outline Diagram of Carton

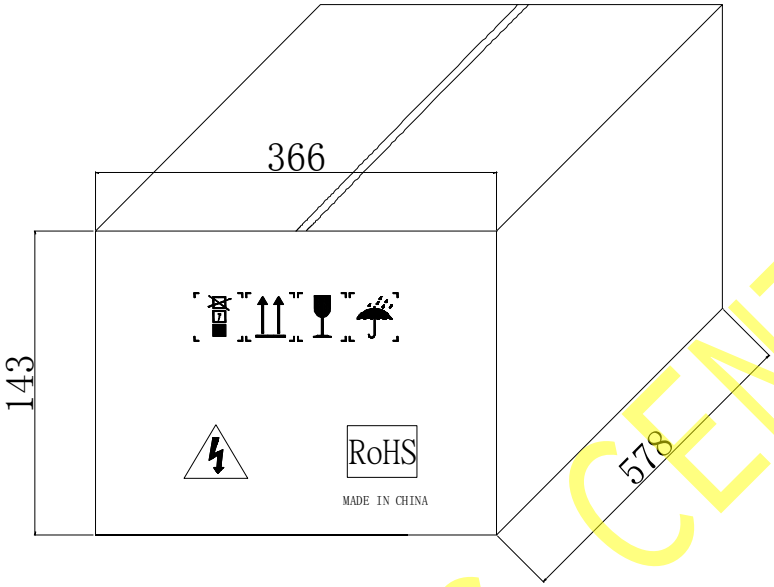

Note:

1. Material: outside the box: K=K, five layers of corrugated paper, the thickness: 6.0±0.5mm, Bursting strength: 11.2kgf min.
2. Outline: bright and clean, no stain, yellow white and no color difference, no gap junction.
3. Dimension: above dimensions for carton size, tolerance +/-3mm.

12.2 Side Label

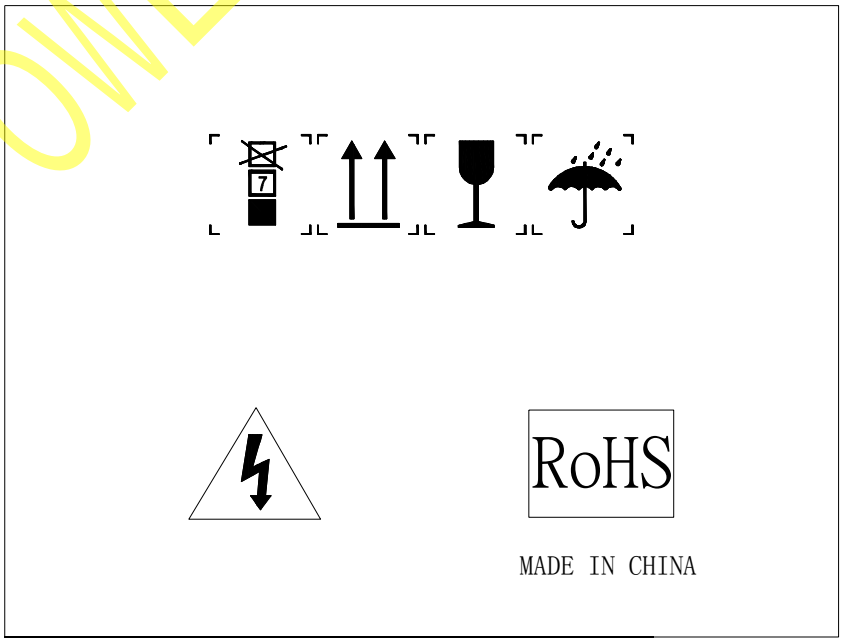

12.3 Front Label

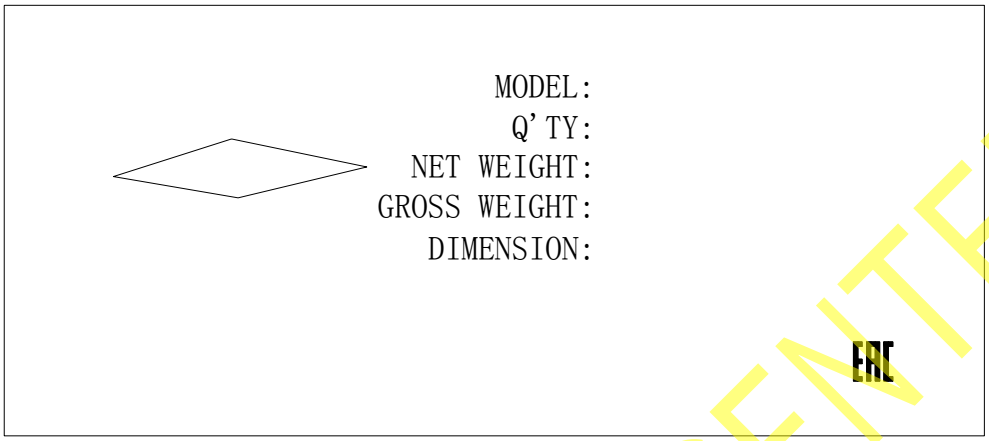

13.0 SOFTWARE

13.1 Data Precision Requirement

Some data read from power supply should have a precision requirement as below table.

Table30. Required Accuracy (100-127Vac/200-240Vac @ 50Hz~60Hz or 160-340Vdc)

Output Load Condition	<10%	10%-20%	20%-100%
Read_VIN(88h)	±5%	±5%	±5%
Read_IIN(89h)	/	±0.3A	±5%
Read_PIN(97h)	/	±20W	±5%
Read_Vout(8Bh)	±3%	±3%	±3%
Read_Iout(8Ch)	/	±1.5A	±5%
Read_Pout(96h)	/	±15W	±5%
Read_Ambient Temperature(0-70℃)(8Dh)	±5℃		

Note:

1. There is no accuracy requirement when PSU is in PS-OFF mode.

13.2 PMBus Specification

Linear Data Formats

The Linear Data Format is a two byte value with: An 11 bit, two's complement mantissa and A 5 bit, two's complement exponent (scaling factor).The format of the two data bytes is illustrated in below Figure.

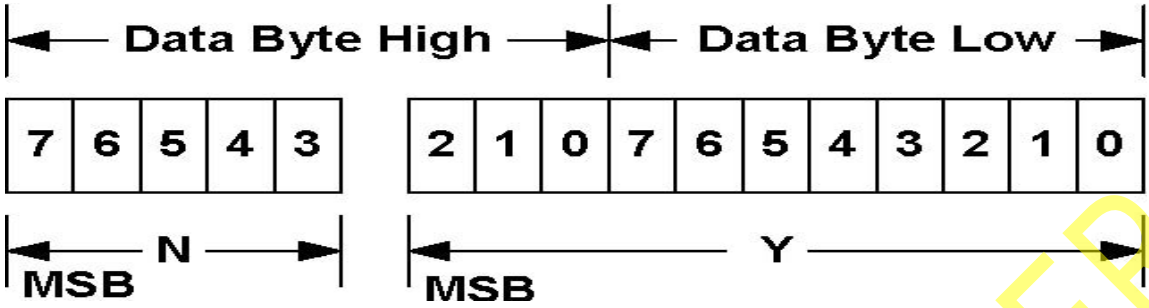

The relation between Y, N and the "real world" value is: $X = Y \cdot 2^N$

Where, as described above:

X is the "real world" value being communicated

Y is an 11 bit, two's complement integer;

N is a 5 bit, two's complement integer.

Devices that use the linear format must accept and be able to process any value of N.

13.3 PMBUS Command Supported

Table31. STATUS_WORD Command

Byte	Bit No.	Status Bit Name	Meaning	Support
Low	7	BUSY	A fault was declared because the device was busy and unable to respond.	No
	6	OFF	This bit is asserted if the unit is not providing power to the output, regardless of the reason, including simply not being enabled.	Yes
	5	VOUT_OV	An output over voltage fault has occurred.	Yes
	4	IOUT_OC	An output over current fault has occurred.	Yes
	3	VIN_UV	An input under voltage fault has occurred.	Yes
	2	TEMPERATURE	A temperature fault or warning has occurred.	Yes
	1	CML	A communications, memory or logic fault has occurred.	No
	0	NONE OF THE ABOVE	A fault or warning not listed in bits [7:1] of this byte has occurred.	No
High	7	VOUT	An output voltage fault or warning has occurred.	Yes
	6	IOUT/POUT	An output current or output power fault or warning has occurred.	Yes

	5	INPUT	An input voltage, input current, or input power fault or warning has occurred.	Yes
	4	MFR	A manufacturer specific fault or warning has occurred.	No
	3	POWER_ GOOD#	The POWER_GOOD signal, if present, is negated.	Yes
	2	FANS	A fan or airflow fault or warning has occurred.	Yes
	1	OTHER	A bit in STATUS_OTHER is set.	No
	0	UNKNOWN	A fault type not given in bits [15:1] of the STATUS_WORD has been detected.	No

Table32. STATUS_VOUT Command

Bit	Meaning	Support
7	VOUT Over voltage Fault	Yes
6	VOUT Over voltage Warning	No
5	VOUT Under voltage Warning	No
4	VOUT Under voltage Fault	Yes
3	VOUT_MAX Warning (An attempt has been made to set the output voltage to value higher than allowed by the VOUT_MAX command)	No
2	TON_MAX_FAULT	No
1	TOFF_MAX Warning	No
0	VOUT Tracking Error	No

Table33. STATUS_IOUT Command

Bit	Meaning	Support
7	IOUT Over current Fault	Yes
6	IOUT Over current And Low Voltage Shutdown Fault	No
5	IOUT Over current Warning	Yes
4	IOUT Undercurrent Fault	No
3	Current Share Fault	No
2	Power Limiting	No
1	POUT Overpower Fault	No
0	POUT Overpower Warning	No

Table34. STATUS_INPUT Command

Bit	Meaning	Support
7	VIN Over voltage Fault	Yes
6	VIN Over voltage Warning	No
5	VIN Under voltage Warning	No
4	VIN Under voltage Fault	Yes
3	Unit Off For Insufficient Input Voltage	No
2	IIN Over current Fault	No
1	IIN Over current Warning	No
0	PIN Overpower Warning	No

Table35. STATUS_TEMPERATURE Command

Bit	Meaning	Support
7	Over temperature Fault	Yes
6	Over temperature Warning	Yes
5	Under temperature Warnings	No
4	Under temperature Fault	No
3	Reserved	No
2	Reserved	No
1	Reserved	No
0	Reserved	No

Table36. STATUS_FAN_1_2 Command

Bit	Meaning	Support
7	Fan 1 Fault	Yes
6	Fan 2 Fault	No
5	Fan 1 Warning	Yes
4	Fan 2 Warning	No
3	Fan 1 Speed Overridden	No
2	Fan 2 Speed Overridden	No
1	Airflow Fault	No
0	Airflow Warning	No

Table37. STATUS _OTHER Command

Bit	Meaning	Support
7	Reserved	No
6	Reserved	No
5	Input A Fuse Or Circuit Breaker Fault	No
4	Input B Fuse Or Circuit Breaker Fault	No
3	Input A OR-ing Device Fault	No
2	Input B OR-ing Device Fault	No
1	Output OR-ing Device Fault	No
0	Reserved	No

Table38. Supported Command Summary

CMD Code	Name	Type	Bytes	Remark
03h	CLEAR_FAULTS	Send Byte	0	
19h	CAPABILITY	Read Byte	1	
1Ah	QUERY	Block Read	1	
20h	VOUT_MODE	Read Byte	1	
40h	VOUT_OV_FAULT_LIMIT	Read Word	2	
44h	VOUT_UV_FAULT_LIMIT	Read Word	2	
46h	IOUT_OC_FAULT_LIMIT	Read Word	2	
4Ah	IOUT_OC_WARN_LIMIT	Read Word	2	
4Fh	OT_FAULT_LIMIT	Read Word	2	
51h	OT_WARN_LIMIT	Read Word	2	
55h	VIN_OV_FAULT_LIMIT	Read Word	2	
57h	VIN_OV_WARN_LIMIT	Read Word	2	
58h	VIN_UV_WARN_LIMIT	Read Word	2	
59h	VIN_UV_FAULT_LIMIT	Read Word	2	
78h	STATUS_BYTE	Read Byte	1	
79h	STATUS_WORD	Read Word	2	
7Ah	STATUS_VOUT	Read Byte	1	
7Bh	STATUS_IOUT	Read Byte	1	

7Ch	STATUS _INPUT	Read Byte	1	
7Dh	STATUS_TEMPERATURE	Read Byte	1	
7Fh	STATUS _OTHER	Read Byte	1	
80h	READ_VIN_TYPE	Read Byte	1	00:NO AC; 01:AC; 02:HVDC
81h	STATUS_FANS_1_2	Read Byte	1	
84h	READ_Vsb_OUT(Mfr. Defined)	Read Word	2	
85h	READ_Isb_OUT(Mfr. Defined)	Read Word	2	
86h	READ_EIN	Block Read	6	
87h	READ_EOUT	Block Read	6	
88h	READ_VIN	Read Word	2	
89h	READ_IIN	Read Word	2	
8Bh	READ_VOUT	Read Word	2	
8Ch	READ_IOUT	Read Word	2	
8Dh	READ_TEMPERATURE_1	Read Word	2	
8Eh	READ_TEMPERATURE_2	Read Word	2	
8Fh	READ_TEMPERATURE_3	Read Word	2	
90h	READ_FAN_SPEED_1	Read Word	2	Rpm value
96h	READ_POUT	Read Word	2	
97h	READ_PIN	Read Word	2	
98h	PMBUS_REVISION	Read Byte	1	V1.2
99h	MFR_ID	Read Block	14	See MFR Data table
9Ah	MFR_MODEL	Read Block	14	See MFR Data table
9Bh	MFR_REVISION	Read Block	6	Updata
A0h	MFR_VIN_MIN	Read Word	2	See MFR Data table
A1h	MFR_VIN_MAX	Read Word	2	See MFR Data table
A4h	MFR_VOUT_MIN	Read Word	2	See MFR Data table
A5h	MFR_VOUT_MAX	Read Word	2	See MFR Data table
A6h	MFR_IOUT_MAX	Read Word	2	See MFR Data table

A7h	MFR_POUT_MAX	Read Word	2	See MFR Data table
A8h	MFR_TAMBIENT_MAX	Read Word	2	See MFR Data table
A9h	MFR_TAMBIENT_MIN	Read Word	2	See MFR Data table
D0h	SMART_ON_CONFIG	Write Byte Read Byte	1	00h Standard Redundancy 01h Smart On Active 02h Smart Standby 03h Smart Standby 04h Smart Standby

Table39. MFR Data

CMD Code	Name	Content
99h	MFR_ID	ASPOWER
9Ah	MFR_MODEL	U1A-D11200-DRB
A0h	MFR_VIN_MIN	90
A1h	MFR_VIN_MAX	264
A4h	MFR_VOUT_MIN	11.4
A5h	MFR_VOUT_MAX	12.6
A6h	MFR_IOUT_MAX	97
A7h	MFR_POUT_MAX	1200
A8h	MFR_TAMBIENT_MAX	50
A9h	MFR_TAMBIENT_MIN	0

Appendix

Mfg Date & Time:
2017/12/24 4:14:00 PM

U1A-D11200-DRB FRU MEMORY MAP XXF

ITEM	ADDRESS	BYTE VALUE (DEC)	BYTE VALUE (hex)	DESCRIPTION	BLOCK TITLE
1	0000H	1	01	FORMAT VERSION NUMBER	COMMON HEADER
2	0001H	1	01	INTERNAL USE AREA OFFSET	
3	0002H	0	00	CHASSIS INFO AREA OFFSET	
4	0003H	0	00	BOARD AREA OFFSET	
5	0004H	3	03	PRODUCT INFO AREA OFFSET	
6	0005H	11	0B	MULTI RECORD AREA OFFSET	
7	0006H	0	00	PAD (ALWAYS ZERO)	
8	0007H	240	F0	ZERO CHECK SUM (100H-(TOTAL BYTES))	
1	0008H	1	01	PAD (ALWAYS ZERO)	INTERNAL USE AREA
2	0009H	0	00	PAD (ALWAYS ZERO)	
3	000AH	0	00	PAD (ALWAYS ZERO)	
4	000BH	0	00	PAD (ALWAYS ZERO)	
5	000CH	0	00	PAD (ALWAYS ZERO)	
6	000DH	0	00	PAD (ALWAYS ZERO)	
7	000EH	0	00	PAD (ALWAYS ZERO)	
8	000FH	0	00	PAD (ALWAYS ZERO)	
9	0010H	0	00	PAD (ALWAYS ZERO)	
10	0011H	0	00	PAD (ALWAYS ZERO)	
11	0012H	0	00	PAD (ALWAYS ZERO)	
12	0013H	0	00	PAD (ALWAYS ZERO)	
13	0014H	0	00	PAD (ALWAYS ZERO)	
14	0015H	0	00	PAD (ALWAYS ZERO)	
15	0016H	0	00	PAD (ALWAYS ZERO)	
16	0017H	0	00	PAD (ALWAYS ZERO)	
17	0018H	1	01	PRODUCT AREA FORMAT VERSION	PRODUCT INFORMATION AREA
18	0019H	8	08	PRODUCT AREA LENGTH (#BYTES / 8)	
19	001AH	25	19	LANGUAGE (ENGLISH)	
20	001BH	199	C7	PRODUCT MANUFACTURER NAME LENGTH / byte	
21	001CH	65	41	A	
22	001DH	83	53	S	
23	001EH	80	50	P	
24	001FH	79	4F	O	
25	0020H	87	57	W	
26	0021H	69	45	E	
27	0022H	82	52	R	
28	0023H	207	CF	PRODUCT NAME LENGTH	
29	0024H	85	55	U	
30	0025H	49	31	1	
31	0026H	65	41	A	
32	0027H	45	2D	-	
33	0028H	68	44	D	
34	0029H	49	31	1	
35	002AH	49	31	1	
36	002BH	50	32	2	
37	002CH	48	30	0	
38	002DH	48	30	0	
39	002EH	45	2D	-	
40	002FH	68	44	D	
41	0030H	82	52	R	
42	0031H	66	42	B	
43	0032H	32	20		
44	0033H	197	C5	CUSTOMER PRODUCT SERIAL NO. LENGTH	Part NO.
45	0034H	32	20		
46	0035H	32	20		
47	0036H	32	20		
48	0037H	32	20		
49	0038H	32	20		
50	0039H	195	C3	BORAD VERSION type/length	
51	003AH	49	31	1	To be updated
52	003BH	46	2E	.	To be updated
53	003CH	48	30	0	To be updated
54	003DH	214	D6	PRODUCT SERIAL NO. LENGTH	
55	003EH	85	55	U	To be updated
56	003FH	49	31	1	To be updated
57	0040H	65	41	A	To be updated
58	0041H	68	44	D	To be updated

59	0042H	49	31	1	To be updated
60	0043H	49	31	1	To be updated
61	0044H	50	32	2	To be updated
62	0045H	48	30	0	To be updated
63	0046H	48	30	0	To be updated
64	0047H	82	52	R	To be updated
65	0048H	49	31	1	To be updated
66	0049H	73	49	I	To be updated
67	004AH	80	50	P	To be updated
68	004BH	67	43	C	To be updated
69	004CH	49	31	1	To be updated
70	004DH	74	4A	J	To be updated
71	004EH	65	41	A	To be updated
72	004FH	75	4B	K	To be updated
1	0050H	48	30	0	To be updated
2	0051H	52	34	4	To be updated
3	0052H	50	32	2	To be updated
4	0053H	51	33	3	To be updated
5	0054H	192	C0	ASSET TAG type/length byte	
6	0055H	192	C0	FRU File ID type/length byte	
7	0056H	193	C1	NO MORE FIELDS MARKER	
8	0057H	218	DA	CHECKSUM (100H - (LOWER BYTE (SUM OF BYTES))	To be updated
9	0058H	0	00	RECORD TYPE ID 0X00 = POWER SUPPLY INFORMATION	MULTIRECORD
10	0059H	2	02	7 : 7 END OF LIST , 6 : 4 =000B , 3 : 0 RECORD FORMAT VERSION = 2	HEADER
11	005AH	24	18	RECORD LENGTH OF MULTIRECORD	
12	005BH	150	96	RECORD CHECKSUM	
13	005CH	80	50	HEADER CHECKSUM	
14	005DH	176	B0	15-12 : RESERVED , WRITE AS 0000B	1200W
15	005EH	4	04	11-0 : OVERALL CAPACITY (WATTS)	1200W
16	005FH	176	B0	PEAK VALUE	1200W
17	0060H	4	04	LSB FIRST	1200W
18	0061H	45	2D	INRUSH CURRENT FFH IF NOT SPECIFIED	45A
19	0062H	5	05	SET TO 0 IF NO INRUSH CURRENT SPECIFIED	5mS
20	0063H	16	10	LOW END INPUT VOLTAGE RANGE 1 100V = 2328H	100V
21	0064H	39	27		100V
22	0065H	156	9C	HIGH END INPUT VOLTAGE RANGE 1 140 = 36B0H	127V
23	0066H	49	31		127V
24	0067H	32	20	LOW END INPUT VOLTAGE RANGE 2 180V = 4650H	200V
25	0068H	78	4E		200V
26	0069H	192	C0	HIGH END INPUT VOLTAGE RANGE 2 264 = 6720H	240V
27	006AH	93	5D		240V
28	006BH	47	2F	LOW END INPUT FREQUENCY RANGE 47HZ = 2FH	47Hz
29	006CH	63	3F	HIGH END INPUT FREQUENCY RANGE 63HZ = 3FH	63Hz
1	006DH	12	0C	A / C DROPOUT TOLERANCE IN mS 12mS = 0CH	12mS
2	006EH	26	1A	7-5 : RESERVED , WRITE AS 000B 4 : TACHOMETER PULSES PER ROTATION / PREDICTIVE FALL POLARITY YES = 1 (FAIL = 1 , PASS = 0) 3 : HOT SWAP / REDUNDANCY SUPPORT YES = 1 2 : AUTOSWITCH YES = 1 1 : POWER FACTOR CORRECTION YES = 1 0 : PREDICTIVE FALL SUPPLY YES = 1	
3	006FH	176	B0	PEAK WATTAGE 15-12 : HOLD UP TIME IN SECONDS 1S = 1H	1200W
4	0070H	196	C4	11-0 PEAK CAPACITY (WATTS) (LSB FIRST) 575W = 01C2H	12S
5	0071H	0	00	COMMBINED WATTAGE 7-4 : VOLTAGE 1 , 3-0 : VOLTAGE 2 =00 H	
6	0072H	176	B0	BYTE 2 : 3 TOTAL COMBINED WATTAGE (LSB FIRST) W =0000H	1200W
7	0073H	4	04		1200W
8	0074H	133	85	PREDICTIVE FAIL TACHOMETER LOWER THRESHOLD (RPM / 60) 2000/60 --> 21h	
9	0075H	1	01	RECORD TYPE ID 0X01 = DC OUTPUT Record	MULTIRECORD
10	0076H	2	02	7 : 7 END OF LIST , 6 : 4 =000B , 3 : 0 RECORD FORMAT VERSION = 2	HEADER
11	0077H	13	0D	RECORD LENGTH OF MULTIRECORD	
12	0078H	130	82	RECORD CHECKSUM	
13	0079H	110	6E	HEADER CHECKSUM	
14	007AH	1	01	+12V 7 : STANDBY = 0 , 6-4 : RESERVED 000B , 3-0 : OUTPUT NUMBER = 0001B	+12V
15	007BH	176	B0	NOMINAL VOLTAGE (10mV) 1200 = 04B0H	12.0V
16	007CH	4	04		12.0V
17	007DH	116	74	MAXIMUM NEGATIVE VOLTAGE DEVIATION (10mV)	11.4V
18	007EH	4	04		11.4V
1	007FH	236	EC	MAXIMUM POSITIVE VOLTAGE DEVIATION (10mV)	12.6V
2	0080H	4	04		12.6V
3	0081H	120	78	RIPPLE AND NOISE PK-PK 10Hz TO 20MHz (mV) 120mV = 0078H	120mV

4	0082H	0	00		120mV
5	0083H	232	E8	MINIMUM CURRENT DRAW(mA)	1.0A
6	0084H	3	03		1.0A
7	0085H	255	FF	MAXIMUM CURRENT DRAW(mA)	97A
8	0086H	255	FF		97A
9	0087H	1	01	RECORD TYPE ID 0X01 = **DC OUTPUT Record**	MULTIRECORD
10	0088H	130	82	7 : 7 END OF LIST , 6 : 4 =000B , 3 : 0 RECORD FORMAT VERSION = **2**	HEADER
11	0089H	13	0D	RECORD LENGTH OF MULTIRECORD	
12	008AH	195	C3	RECORD CHECKSUM	
13	008BH	173	AD	HEADER CHECKSUM	
14	008CH	130	82	+12VSB 7 : STANDBY = 0 , 6-4 : RESERVED 000B , 3-0 : OUTPUT NUMBER = 0010B	+12VSB
15	008DH	176	B0	NOMINAL VOLTAGE(10mV)	12V
16	008EH	4	04		12V
17	008FH	116	74	MAXIMUM NEGATIVE VOLTAGE DEVIATION(10mV)	11.4V
18	0090H	4	04		11.4V
1	0091H	236	EC	MAXIMUM POSITIVE VOLTAGE DEVIATION(10mV)	12.6V
2	0092H	4	04		12.6V
3	0093H	120	78	RIPPLE AND NOISE PK - PK 10Hz TO 20MHz(mV) 50mV = 0032H	120mV
4	0094H	0	00		120mV
5	0095H	100	64	MINIMUM CURRENT DRAW(mA) 0mA = 0000H	0.1A
6	0096H	0	00		0.1A
7	0097H	184	B8	MAXIMUM CURRENT DRAW(mA)	3A
8	0098H	11	0B		3A
9	0099H	0	00	Unused Area	
10	009AH	0	00	Unused Area	
11	009BH	0	00	Unused Area	
12	009CH	0	00	Unused Area	
13	009DH	0	00	Unused Area	
14	009EH	0	00	Unused Area	
15	009FH	0	00	Unused Area	
16	00A0H	0	00	Unused Area	
17	00A1H	0	00	Unused Area	
18	00A2H	0	00	Unused Area	
19	00A3H	0	00	Unused Area	
20	00A4H	0	00	Unused Area	
21	00A5H	0	00	Unused Area	
22	00A6H	0	00	Unused Area	
23	00A7H	0	00	Unused Area	
24	00A8H	0	00	Unused Area	
25	00A9H	0	00	Unused Area	
26	00AAH	0	00	Unused Area	
27	00ABH	0	00	Unused Area	
28	00ACH	0	00	Unused Area	
29	00ADH	0	00	Unused Area	
30	00AEH	0	00	Unused Area	
31	00AFH	0	00	Unused Area	
32	00B0H	0	00	Unused Area	
33	00B1H	0	00	Unused Area	
34	00B2H	0	00	Unused Area	
35	00B3H	0	00	Unused Area	
36	00B4H	0	00	Unused Area	
37	00B5H	0	00	Unused Area	
38	00B6H	0	00	Unused Area	
39	00B7H	0	00	Unused Area	
40	00B8H	0	00	Unused Area	
41	00B9H	0	00	Unused Area	
42	00BAH	0	00	Unused Area	
43	00BBH	0	00	Unused Area	
44	00BCH	0	00	Unused Area	
45	00BDH	0	00	Unused Area	
46	00BEH	0	00	Unused Area	
47	00BFH	0	00	Unused Area	
48	00C0H	0	00	Unused Area	
49	00C1H	0	00	Unused Area	
50	00C2H	0	00	Unused Area	
51	00C3H	0	00	Unused Area	
52	00C4H	0	00	Unused Area	
53	00C5H	0	00	Unused Area	
54	00C6H	0	00	Unused Area	
55	00C7H	0	00	Unused Area	

56	00C8H	0	00	Unused Area	
57	00C9H	0	00	Unused Area	
58	00CAH	0	00	Unused Area	
59	00CBH	0	00	Unused Area	
60	00CCH	0	00	Unused Area	
61	00CDH	0	00	Unused Area	
62	00CEH	0	00	Unused Area	
63	00CFH	0	00	Unused Area	
64	00D0H	0	00	Unused Area	
65	00D1H	0	00	Unused Area	
66	00D2H	0	00	Unused Area	
67	00D3H	0	00	Unused Area	
68	00D4H	0	00	Unused Area	
69	00D5H	0	00	Unused Area	
70	00D6H	0	00	Unused Area	
71	00D7H	0	00	Unused Area	
72	00D8H	0	00	Unused Area	
73	00D9H	0	00	Unused Area	
74	00DAH	0	00	Unused Area	
75	00DBH	0	00	Unused Area	
76	00DCH	0	00	Unused Area	
77	00DDH	0	00	Unused Area	
78	00DEH	0	00	Unused Area	
79	00DFH	0	00	Unused Area	
80	00E0H	0	00	Unused Area	
81	00E1H	0	00	Unused Area	
82	00E2H	0	00	Unused Area	
83	00E3H	0	00	Unused Area	
84	00E4H	0	00	Unused Area	
85	00E5H	0	00	Unused Area	
86	00E6H	0	00	Unused Area	
87	00E7H	0	00	Unused Area	
88	00E8H	0	00	Unused Area	
89	00E9H	0	00	Unused Area	
90	00EAH	0	00	Unused Area	
91	00EBH	0	00	Unused Area	
92	00ECH	0	00	Unused Area	
93	00EDH	0	00	Unused Area	
94	00EEH	0	00	Unused Area	
95	00EFH	0	00	Unused Area	
96	00F0H	0	00	Unused Area	
97	00F1H	0	00	Unused Area	
98	00F2H	0	00	Unused Area	
99	00F3H	0	00	Unused Area	
100	00F4H	0	00	Unused Area	
101	00F5H	0	00	Unused Area	
102	00F6H	0	00	Unused Area	
103	00F7H	0	00	Unused Area	
104	00F8H	0	00	Unused Area	
105	00F9H	0	00	Unused Area	
106	00FAH	0	00	Unused Area	
107	00FBH	0	00	Unused Area	
108	00FCH	0	00	Unused Area	
109	00FDH	0	00	Unused Area	
110	00FEH	0	00	Unused Area	
111	00FFH	0	00	Unused Area	

FRU DATA FOLLOW WITH SPEC LABEL, SPEC LABEL SHOULD BE CONFIRMED BY M.E.

Table showing HEX Information: Rev: XXF

Addr	0	1	2	3	4	5	6	7	8	9	A	B	C	D	E	F
0000	01	01	00	00	03	0B	00	F0	01	00	00	00	00	00	00	00
0010	00	00	00	00	00	00	00	00	01	08	19	C7	41	53	50	4F
0020	57	45	52	CF	55	31	41	2D	44	31	31	32	30	30	2D	44
0030	52	42	20	C5	20	20	20	20	20	C3	31	2E	30	D6	55	31
0040	41	44	31	31	32	30	30	52	31	49	50	43	31	4A	41	4B
0050	30	34	32	33	C0	C0	C1	DA	00	02	18	96	50	B0	04	B0
0060	04	2D	05	10	27	9C	31	20	4E	C0	5D	2F	3F	0C	1A	B0
0070	C4	00	B0	04	85	01	02	0D	82	6E	01	B0	04	74	04	EC
0080	04	78	00	E8	03	FF	FF	01	82	0D	C3	AD	82	B0	04	74
0090	04	EC	04	78	00	64	00	B8	0B	00	00	00	00	00	00	00
00A0	00	00	00	00	00	00	00	00	00	00	00	00	00	00	00	00
00B0	00	00	00	00	00	00	00	00	00	00	00	00	00	00	00	00
00C0	00	00	00	00	00	00	00	00	00	00	00	00	00	00	00	00
00D0	00	00	00	00	00	00	00	00	00	00	00	00	00	00	00	00
00E0	00	00	00	00	00	00	00	00	00	00	00	00	00	00	00	00
00F0	00	00	00	00	00	00	00	00	00	00	00	00	00	00	00	00

CHECK LIST All data written to EEPROM should be ASCII code in hexidecimal format

Note: All of the Check Sum are Calculated by Zero Check Sum

NO.	Item	Address	Byte	Description	Value
1	Checksum1	07H	1	100H - (Low Byte Sum(00H~06H))	F0
2	Checksum2	57H	1	100H - (Low Byte Sum(18H~56H))	Updated
3	Checksum3	5BH	1	100H - (Low Byte Sum(5DH~74H))	96
4	Checksum4	5CH	1	100H - (Low Byte Sum(58H~5BH))	50
5	Checksum6	78H	1	100H - (Low Byte Sum(7AH~86H))	82
6	Checksum7	79H	1	100H - (Low Byte Sum(75H~78H))	6E
7	Checksum8	8AH	1	100H - (Low Byte Sum(8CH~98H))	C3
8	Checksum9	8BH	1	100H - (Low Byte Sum(87H~8AH))	AD
9	Manufacturer Name	1CH~22H	7	Use the ASCII Code	"ASPOWER"
10	Product Name	24H~32H	15	Use the ASCII Code	"U1A-D11200-DRB"
11	CUSTOMER PRODUCT NO.	34H~38H	5	Use the ASCII Code	
12	Product Version NO	3AH~3CH	3	Use the ASCII Code*(the value must to accord with #1)	Updated
13	Product Serial No.	3EH~53H	22	Use the ASCII Code*(the value must to accord with #2)	Updated
14	Unused Area	99H~FFH			00